Basics & Introduction

What is microprocessor ?

A **microprocessor** is like the **brain** of a computer or any digital system.

Definition:

A **microprocessor** is a tiny electronic chip that **processes data and instructions**. It's what performs all the **calculations** and **makes decisions** inside a computer.

📦 What's Inside a Microprocessor:

1. **ALU (Arithmetic Logic Unit)** – Does the math and logic.
2. **CU (Control Unit)** – Decides which instruction to run.
3. **Registers** – Small memory areas for quick data access.
4. **Bus Interface** – For communication with memory and other devices.

Metaphor:

Imagine a **school**:

- The **microprocessor** is like the **principal**.
- It **receives instructions** (like orders from the school board),
- **Thinks about them**, and
- **Tells other parts** of the school (like teachers and staff) what to do.

Everything waits for the principal's instructions — just like a microprocessor controls what happens in a digital system.

🖥️ Where is it used?

- Computers
- Mobile phones
- Washing machines
- Cars
- TVs
- Calculators

Basically, any device that's "smart" has a microprocessor inside.

🕰️ Chronological Order of Microprocessors | History of Microprocessor

Important for Exam

Year	Microprocessor	Key Feature
1971	**Intel 4004**	First microprocessor ever (4-bit)
1972	**Intel 8008**	First 8-bit processor
1974	**Intel 8080**	Popular early 8-bit CPU
1976	**Intel 8085**	Enhanced version of 8080, used in early computers
1978	**Intel 8086**	First 16-bit processor (used in PCs)
1979	**Intel 8088**	Like 8086 but with 8-bit external data bus (used in IBM PC)
1982	**Intel 80286**	Introduced protected mode (multitasking OS support)
1985	**Intel 80386**	First 32-bit processor
1989	**Intel 80486**	Built-in math co-processor (faster math)
1993	**Pentium**	Super-fast, could do multiple instructions at once

🧠 Easy Memory Trick (Mnemonics)

Let's make a story with the key numbers:
4004 → 8008 → 8080 → 8085 → 8086 → 8088 → 80286 → 80386 → 80486 → Pentium

✅ Quick Summary:

Category	Microprocessors
4-bit	4004
8-bit	8008 → 8080 → 8085
16-bit	8086 → 8088 → 80286
32-bit	80386 → 80486 → Pentium

Explain me the block diagram of computer and its significance

🧱 Block Diagram of a Computer

Here's a basic version of it:

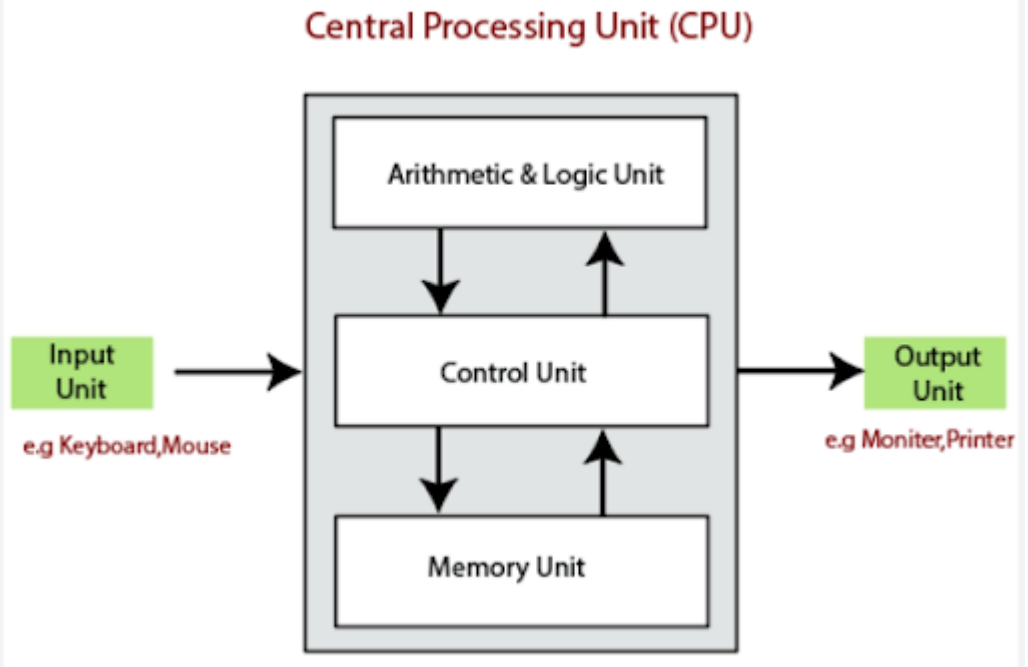

🧠 Metaphor: "Computer as a Restaurant"

- **Input Unit** = Customer placing an order (keyboard, mouse, etc.)
- **Control Unit (CU)** = Restaurant Manager: decides what to do with the order
- **ALU (Arithmetic Logic Unit)** = Chef: does the actual cooking (calculations)
- **Memory Unit** = Kitchen storage: holds ingredients (RAM for active work, ROM for permanent recipes)
- **Output Unit** = Waiter serving the final dish (monitor, printer, etc.)

🧩 Components Explained:

Block	Role	In Real Life
Input Unit	Takes user input and converts to machine language	Keyboard, Mouse
CPU (Central Processing Unit)	The brain: controls everything and processes data	Like a manager + calculator
→ **ALU**	Does math and logic operations	Adds, subtracts, compares values
→ **Control Unit (CU)**	Directs the flow of data and instructions	Decides what happens and when
Memory Unit	Stores data and instructions temporarily or permanently	RAM, ROM, Cache

Output Unit	Shows the result to the user	Monitor, Printer, Speaker

📌 Easy Summary:

A **computer system** works like a **restaurant**, where input is the order, the CPU is the kitchen, memory is the pantry, and the output is the served dish.
The block diagram just shows how each of these parts talk to each other.

Explain the organization of microprocessor based system.

Important

Let's go one step deeper now and look at the **organization of a microprocessor-based system**.

This explains **how the microprocessor connects with other components** to form a complete working system (like a small computer).

🧱 Basic Block Diagram: Microprocessor-Based System

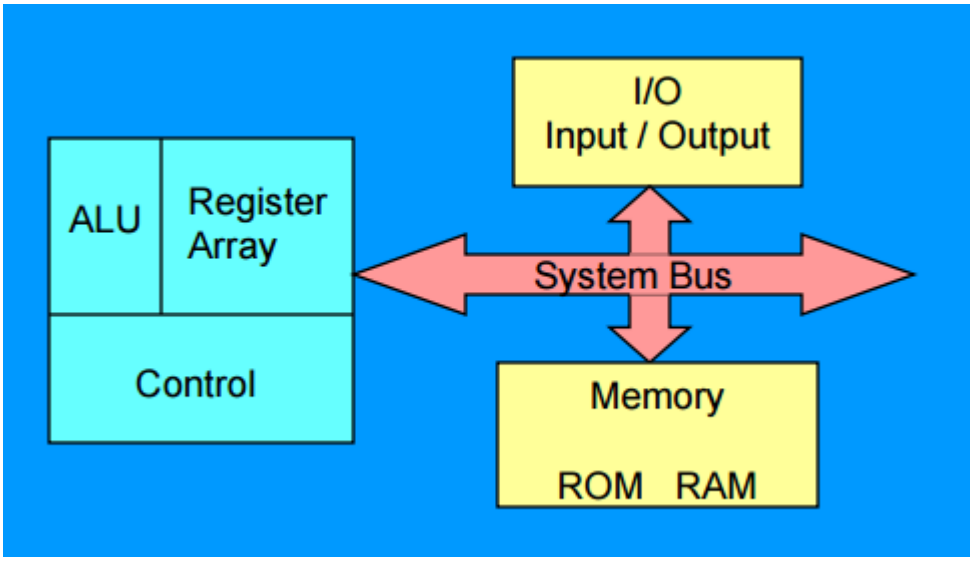

🔧 Main Components (Explained Simply):

Component	What It Does
Microprocessor (CPU)	Brain of the system. Executes instructions.
Memory (RAM/ROM)	RAM: Temporary workspace. ROM: Permanent instructions.

Input Devices	Sends data to microprocessor
Output Devices	Shows result to user
I/O Ports	Communication with other devices
System Bus	Wires that carry data, address, and control signals

🚦 Types of Buses in the System:

Bus Type	Role
Data Bus	Carries actual data (e.g., number 5, letter A)
Address Bus	Carries the location (e.g., send to memory address 2000)
Control Bus	Carries control signals (e.g., read, write, halt)

✅ Summary:

A **microprocessor-based system** connects the microprocessor with memory, input/output devices, and communication ports using system buses. It's like a team working together: CPU as the leader, memory as storage, I/O for interaction, and buses for communication.

Microprocessor Based on Architecture

Von Neumann Architecture vs Harvard Architecture

🧠 Basic Idea

- **Von Neumann**:
  One memory for **both data and instructions**
  (everything is stored in the same place)
- **Harvard**:
  Separate memory for **data** and **instructions**
  (two different paths = faster)

📊 Difference Between Von Neumann and Harvard Architecture

No.	Feature	Von Neumann Architecture	Harvard Architecture
1	**Memory**	Same memory for data & instructions	Separate memory for data & instructions
2	**Speed**	Slower (data & instructions use same bus)	Faster (parallel access with separate buses)
3	**Complexity**	Simple design	More complex
4	**Usage**	Used in general-purpose CPUs (PCs, laptops)	Used in microcontrollers, DSPs
5	**Cost**	Cheaper to implement	More expensive

🧠 Trick to Remember the Differences

🎓 Mnemonic: "V is One, H is Two"

- **V = Von Neumann = One memory**
- **H = Harvard = Two memories**

Use this sentence:

> "**Von is One**, slow but simple.
> **Harvard has Two**, fast but complex."

Imagine:

- **Von Neumann** is a **single-lane road** where both cars (data) and bikes (instructions) move — traffic jam = slow.
- **Harvard** is a **two-lane highway** — one for cars, one for bikes = smooth and fast.

✅ Summary:

- **Von Neumann** is simpler and cheaper, but slower.
- **Harvard** is faster but more complex and costly.

Diagram of Von Neumann Architecture

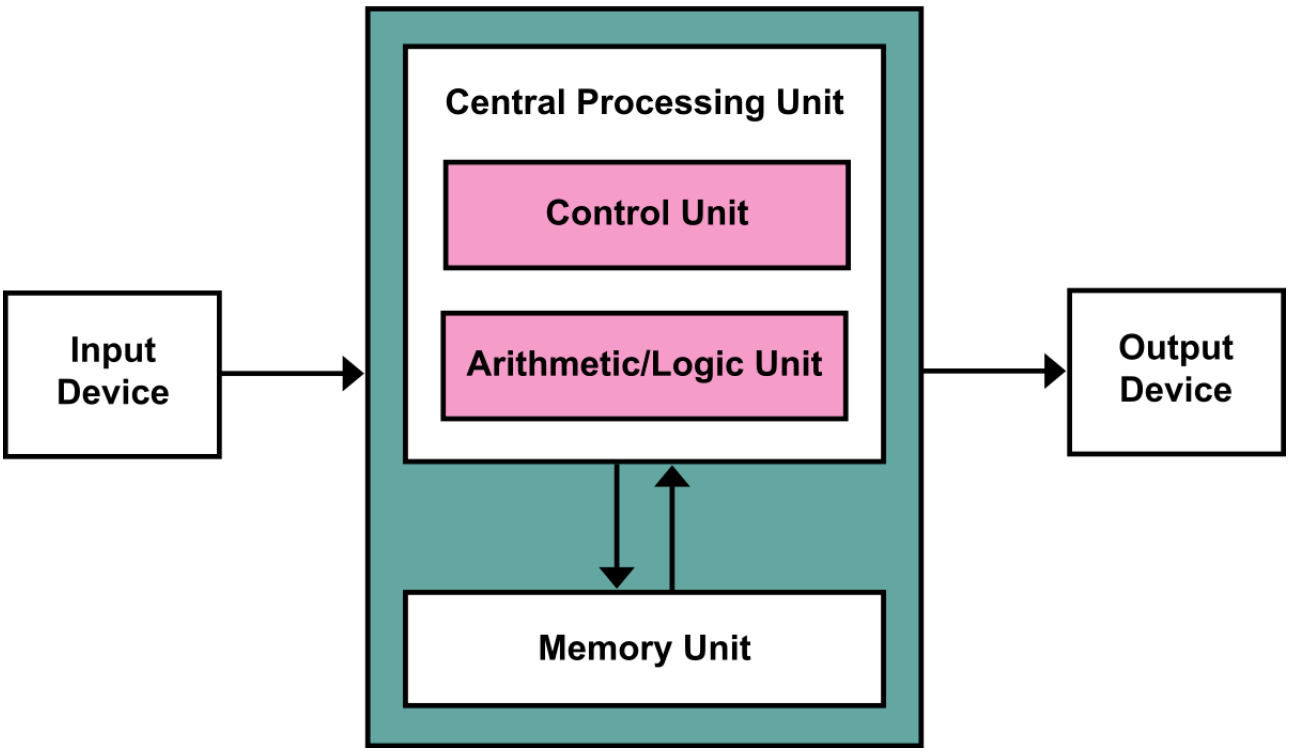
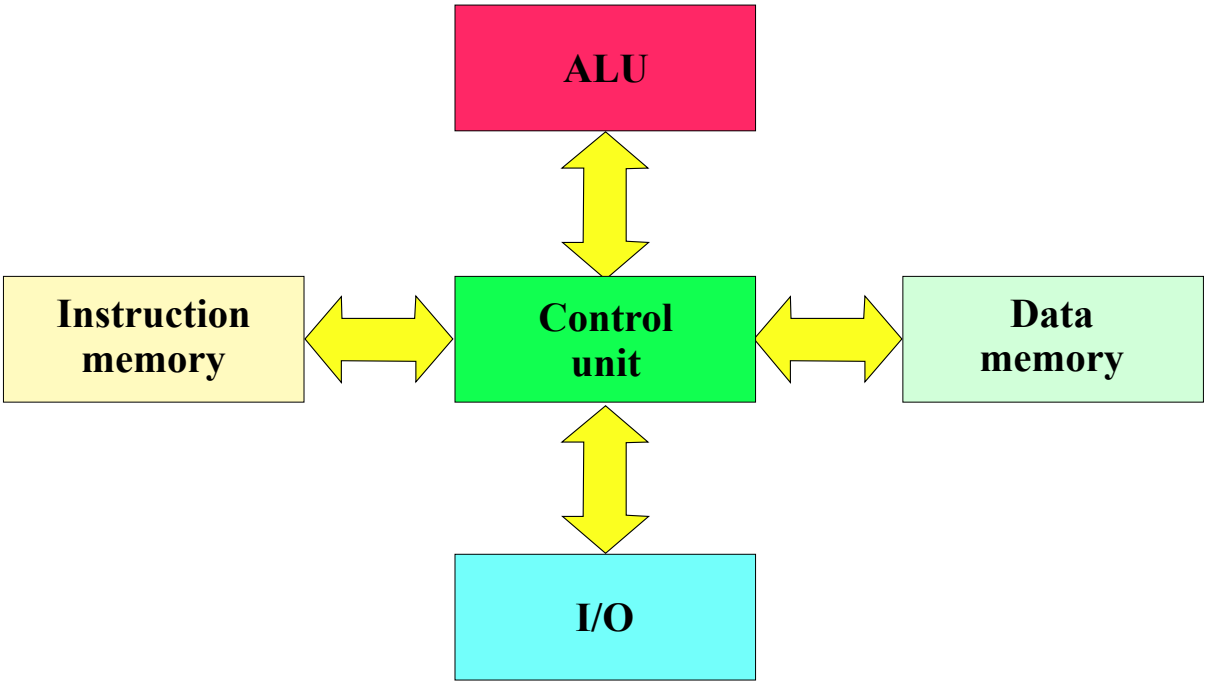
Diagram of Harvard Architecture